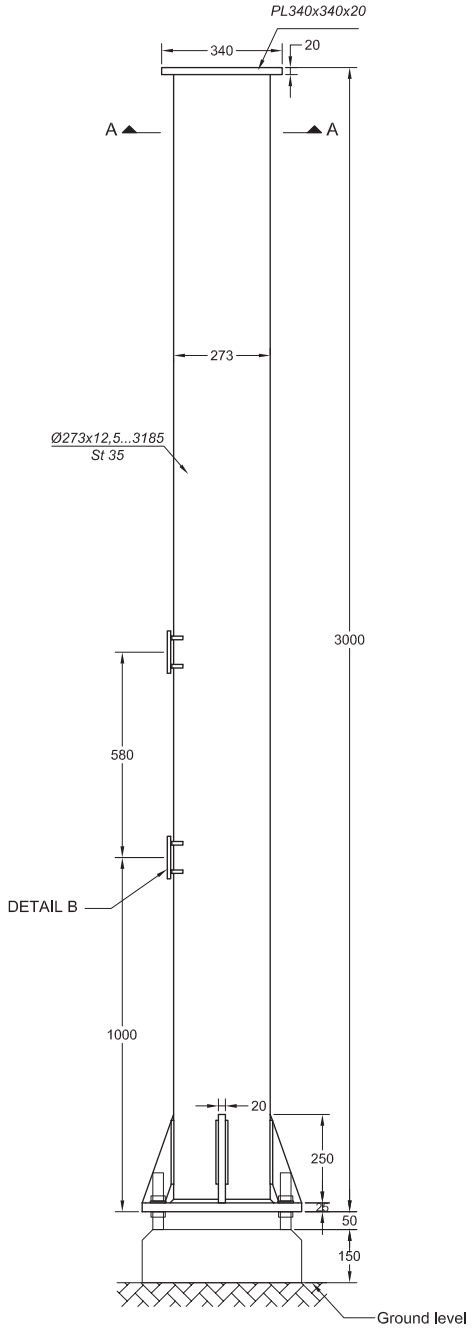

VIEW OF THE LEFT COLUMN OF
THE STEEL SUPPORT STRUCTURE
ON WHICH THE DISCONNECTOR
TYPE 403.1 SHALL BE INSTALLED

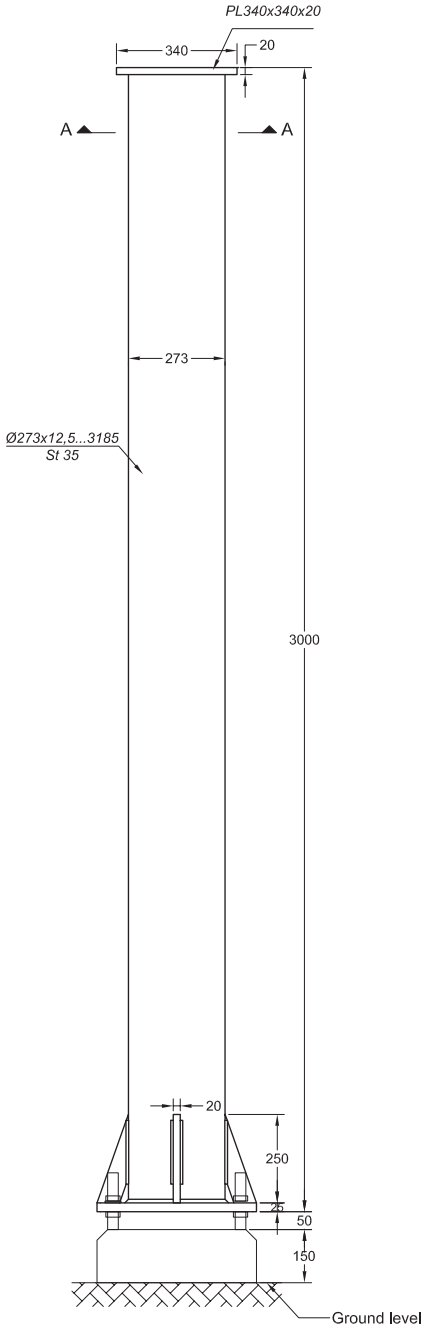

VIEW OF THE RIGHT COLUMN OF
THE STEEL SUPPORT STRUCTURE
ON WHICH THE DISCONNECTOR
TYPE 403.1 SHALL BE INSTALLED

DETAIL B

Plate on which the operating mechanism
of the disconnector shall be mounted

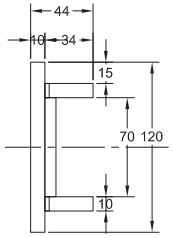

SIDE VIEW

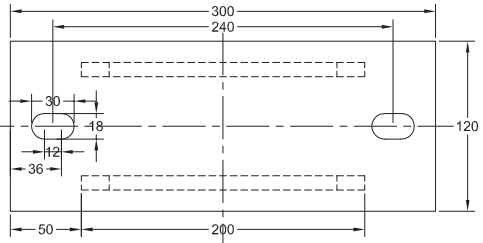

FRONT VIEW

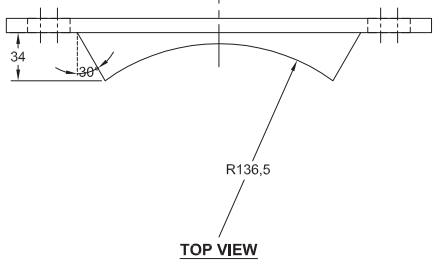

TOP VIEW

SECTION A-A

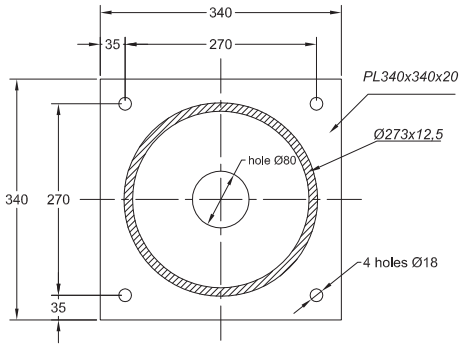

NOTES
1. All dimentions shown are mandatory.
2. All dimentions are in millimetres (mm).

DRAWING No. 403.1/1
Drawing indicating the steel support structure on which the disconnector type 403.1 along with its operating mechanism shall be installed on.